Admission date	Realization date	Signature	Remarks

Zakład elektroniczny TATAREK Jerzy Tatarek
50-559 Wrocław, ul. Świeradowska 75,
tel. (071) 367-21-67, 373-14-88, fax 373-14-58; NIP 899-020-21-48;
Konto: BZ WBK S.A. O/WROCŁAW 6910901522-0000-0000-5201-9335
www.tatarek.com.pl.; E-mail: tatarek@tatarek.com.pl

MICROPROCESSOR TEMPERATURE REGULATOR RT-03 version B

WOJTUŚ

The temperature regulator WOJTUŚ measures temperature in the fireplace water jacket and controls on the base of pre-set thresholds a rotary pump and electromagnetic valve. The additional free contact enables the handling of any device or electric circuit (230V) based on ON/OFF e.g. the lighting of fireplace housing, spit motor and the like.

Basic technical parameters:

Power	230V/50Hz
Power consumption	4W
Output load	3A/230V/50Hz
Temperature measurement range	0 ÷ 99°C
Temperature measurement error	0,5°C
Boiler temperature limit	93°C
Range of temp. adjustments for pump and valve switch-on	5 ÷ 70°C
Alarm temperature	95°C
Fuse	3,15A/250V
Temperature sensor	digital DALLAS

2. Operation Rules

The regulator turns on pump circuit if measured temperature is higher than preset limit temperature. The switch-off follows if temperature falls by 2°C against limit temperature. While controlling a pump, the contacts STER (fig. 2) are switched over making it possible the control over e.g. another heat source. The valve circuit acts same only that it is possible to set another limit temperature for it. Exceeding 95°C is signaled by sound alarm and display blinking. The alarm will be off, if temperature falls below 93°C. The regulator safeguards the installation against freezing automatically turning on a rotary pump if temperature is lower than 4°C.

IN CASE OF SENSOR DAMAGE OR ITS UNPLUGGING GENERATES BREAKDOWN (sound alarm, on the display the symbol "--" shows up blinking.)

3. Regulator handling

On the control panel (fig.1) are power switch "1" and grill switch "2".

Display "3" shows measured temperature. Turning on a valve is signaled by lamp "5" and a pump by lamp "7" . Pressing the button ZAWÓR "6" causes going over to the programming phase of threshold temperature for activating a valve. Lamp "5" blinks and the display "3" shows limit temperature that can be regulated up ("4") or down ("9"). After 10sec from the last pressing of any button or after re-pressing the button ZAWÓR "6", the programming phase ends.

Pressing the button POMPA "8" causes going over to the programming phase of threshold temperature for activating a pump. Lamp "7" blinks and the display "3" shows limit temperature that can be regulated up ("4") or down ("9"). After 10sec from the last pressing of any button or after re-pressing the button POMPA "8", the programming phase ends.

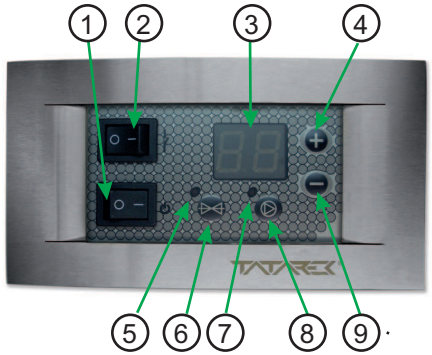

Fig. 1 Control panel

1. Power switch
2. Switch of any device or electric circuit (230V)
3. Display
4. Limit temperature up-button
5. Valve operation lamp
6. Button to programm limit temperature for a valve
7. Pump operation lamp
8. Button to programm limit temperature for a pump
9. Limit temperature down-button

TATAREK®
PRODUCENT ZASILACZY SIECIOWYCH
ISO 9001: 2000

CE CONFORMITY DECLARATION

Ref. No. : 28 RT.09.2002

We, ZAKŁAD ELEKTRONICZNY TATAREK Jerzy Tatarek
75 Świeradowska St., 50-559 Wroclaw

declare under our sole responsibility that

the product: central heating temperature regulator

model: RT-01, RT-02, RT-03

is in conformity with the basic requirements included in Directives EMC 89/336/EEC and the order of Economy, Labor and Social Policy Minister of 12.03.03 regarding the requirements for electric devices (Journal of Laws No.49 of 2003, pos. 41) implementing Directive LVD 73/23/EEC

To the conformity evaluation the following harmonized standards were used:

PN-EN 60730-2-1: 2002 - Automatic electric regulators for house usage and the like. Part 2-1: Specific requirements regarding electric regulators for electric house devices

PN-EN 55014-1: 2002 - Electromagnetic compatibility. Requirements regarding consumer devices, electric tools and the like - Emission of electromagnetic noises. Standard of products group.

PN-EN 60730-1: 2002 - Automatic electric regulators for house usage and the like. Part 1: General requirements.

Complementary information: Laboratory ZETOM, 17 Bednorza st., 40-384 Katowice
Test report no. B/04/156/1 of 23.07.04
B/04/156/2 of 23.07.04

Electronic Engineering Plant TATAREK
has initiated management system and complies with the following standard :
ISO9001: 2000 CERTIFICATE No. 133/2004 of 01.2004
Polish Foreign Trade Chamber

The last two digits of the year in which the CE marking was affixed: 04

Place of issue:
Wrocław
Date of issue:
12.2004

Manufacturer representative:
Jerzy Kopec
Position:
Designer

WARRANTY

1. Warranty is valid [12] [24] months from the date of sale.
2. Producer does not take responsibility for anu mechanical damages made by user.
3. MAKING REPAIRS OR MODYFYING THE DEVICE BY USER IS FORBIDDEN AND CAUSES WARRANTY CANCELATION
4. Warranty card is valid only withseller's signature and stamp
5. Warranty and after-warranty repairs should be done only by producer, damaged regulators should be sent to producer in order to make all repairs needed.

WARNING!

Connection cable of regulator may be replaced only by producer or his authorized service locations

ANY MODIFICATION OF THE REGULATOR MADE BY USER CAN BE THE CAUSE OF SAFETY CONDITIONS DETERIORATION AND CAN EXPOSE THE USER TO ELECTRIC SHOCK OR DAMAGE DEVICES SUPPLIED.

Date of Sale **Seller's signature and stamp**

---------- ----------

Zakład Elektroniczny TATAREK Jerzy Tatarek
50-559 Wrocław, ul. Świeradowska 75,
tel. (071) 367-21-67, 373-14-88, fax 373-14-58; NIP 899-020-21-48;
Konto: BZ WBK S.A. o/ WROCŁAW 6910901522-0000-0000-5201-9335
www.tatarek.com.pl.; e-mail: tatarek@tatarek.com.pl

4. Regulator installation

Connection of pump, free contact and valve must be done out of proper places acc. to fig. 2

WARNING!

Cable "PE" of the mains is to be connected with cables PE of pump and valve by the contact "WAGO"

Temperature sensor must be connected acc. to the rule: cable red "+", cable white "-"

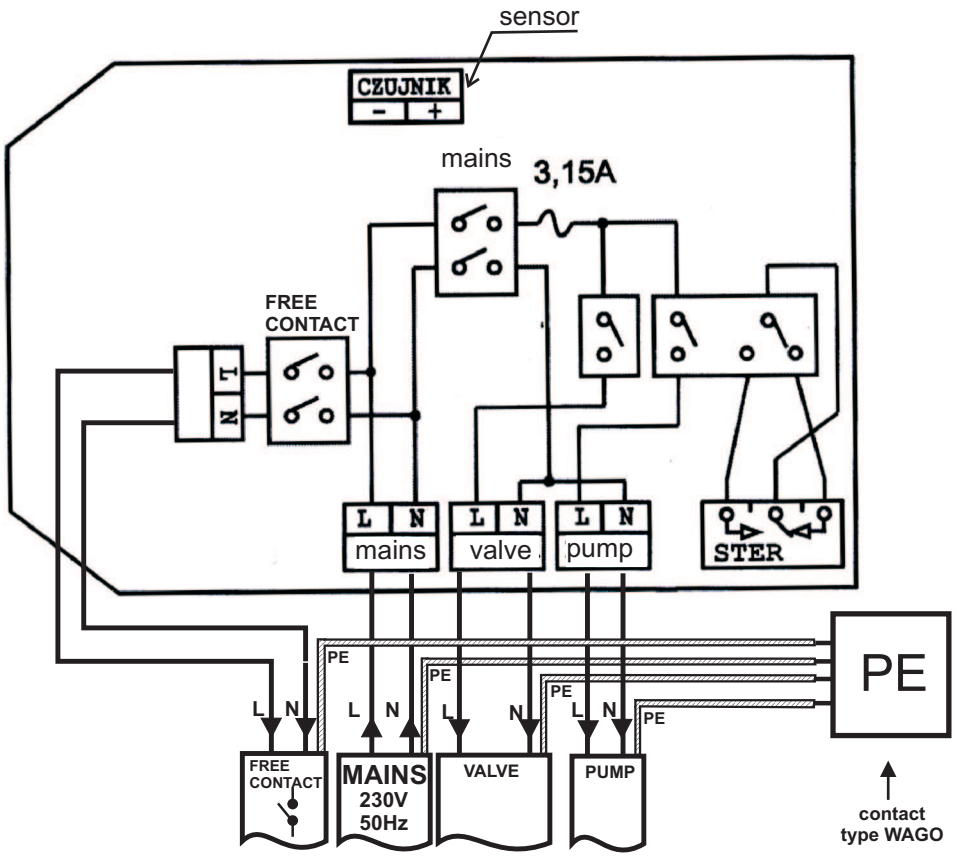

Fig. 2 Electric Schema

Mechanical installation of the regulator RT - 03

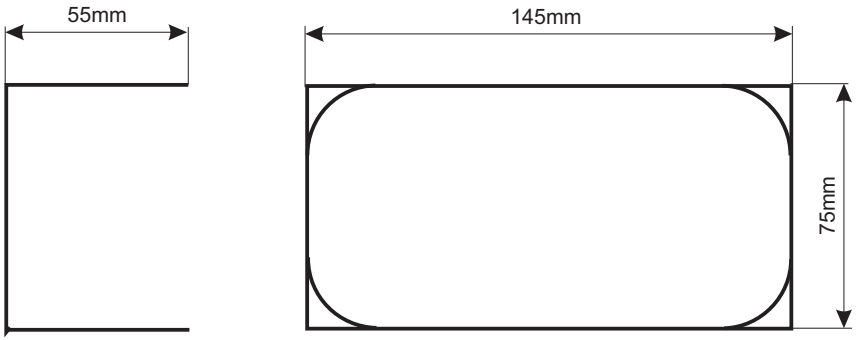

Fig.3 The regulator in-wall opening to fix the double can P2 x 60N

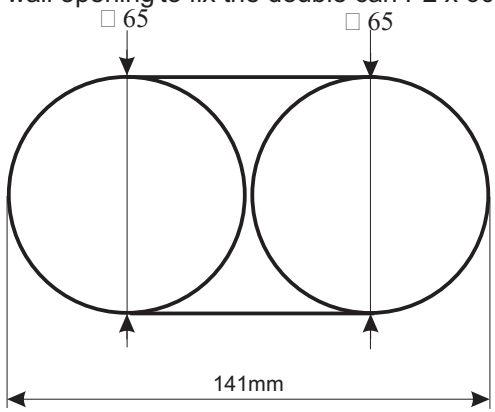

Fig.4 The regulator in-relief opening to fix the double can P2 x 60N

1. Can P2 x 60N
2. Regulator RT-03B
3. Screws
4. Mask

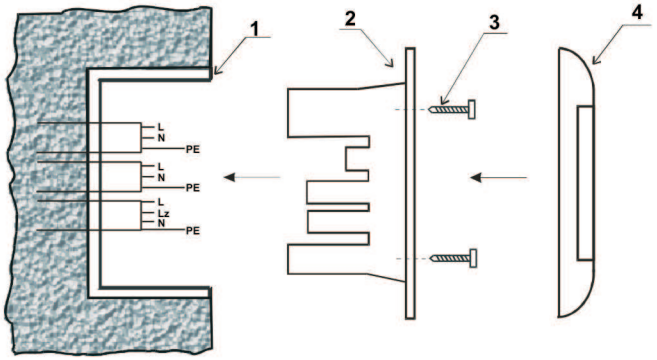

◆Connect the regulator to the cables driven to the can acc. to the electric schema.
◆Insert the regulator into the can P2 x 60 and screw with 4 screws
◆Mount the mask to the regulator

Mounting the sensor into the jacket

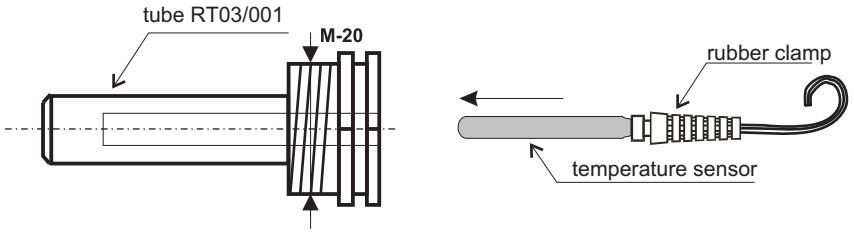

•screw the tube into the fireplace jacket
•put the sensor into the tube

5. Taking off the mask out of the regulator

1. screwdriver
2. mask

a) put 2 screwdrivers
b) pull down energetically
c) take off the mask